PAO
SFS

CLUTCHES

Slip Clutches

Compact: Adjustable & Fixed

PAO
SFS

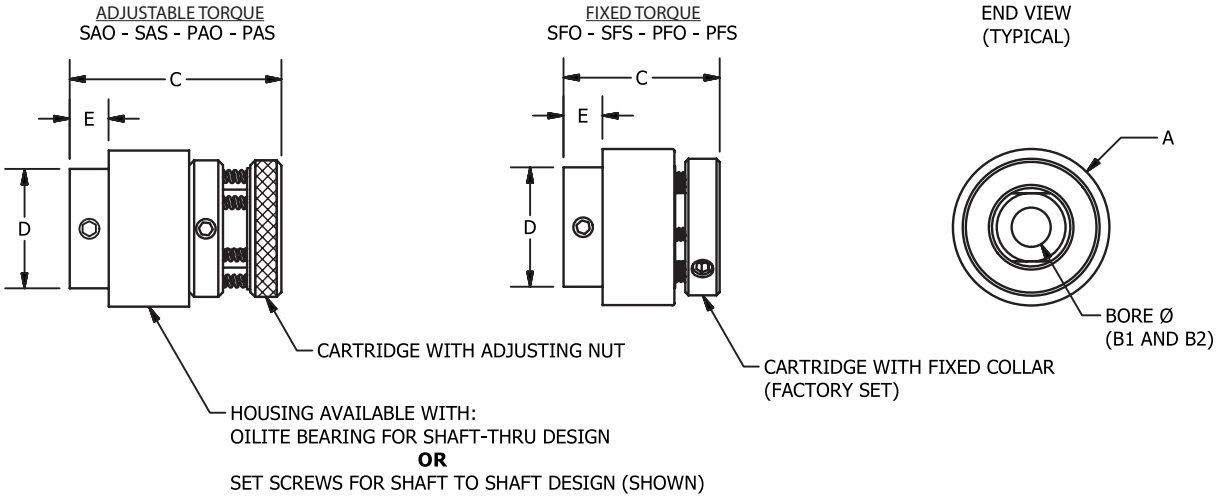

Single Plate										
Part Number		Type	Torque* (in-lb)	Watts	A (in)	B1 & B2 Min Bore	B1 & B2 Max Bore	C (in)	D (in)	E (in)
Shaft-Shaft	Pulley Style									
PAS 16	**PAO 16**	Adjustable	2	1	1.00	0.250	10mm	1.06	0.76	0.25
PFS 16	**PFO 16**	Fixed	2	1	1.00	0.250	10mm	0.78	0.76	0.25

Multiplate										
Part Number		Type	Torque* (in-lb)	Watts	A (in)	B1 & B2 Min Bore	B1 & B2 Max Bore	C (in)	D (in)	E (in)
Shaft-Shaft	Pulley Style									
SAS 16	**SAO 16**	Adjustable	10	6	1.00	0.250	10mm	1.31	0.76	0.25
SFS 16	**SFO 16**	Fixed	10	6	1.00	0.250	10mm	1.00	0.76	0.25

*Torque Capacity @ 50 RPM (50% higher torque possible for lower duty cycles. Call for assistance.)

Size	AVAILABLE BORES B1 & B2																					
	INCH +.002/-.000									METRIC +.05/-.0												
	1/4	5/16	3/8	1/2	5/8	3/4	7/8	1	1 1/4	8	9	10	12	13	14	15	16	20	24	25	30	32
16	•	•	•							•	•	•										
20	•	•	•							•	•	•										
24			•	•								•	•	•								
32				•	•								•	•	•	•	•					
44				•	•								•	•	•	•	•					
48					•	•	•	•								•	•	•	•	•		
52						•	•	•	•									•	•	•	•	•
CODE	24	27	31	36	41	47	50	53	55	28	30	32	35	37	38	40	42	48	51	52	56	58

PAO
SFS

CLUTCHES

Slip Clutches

Standard: Adjustable & Fixed

PAO
SFS

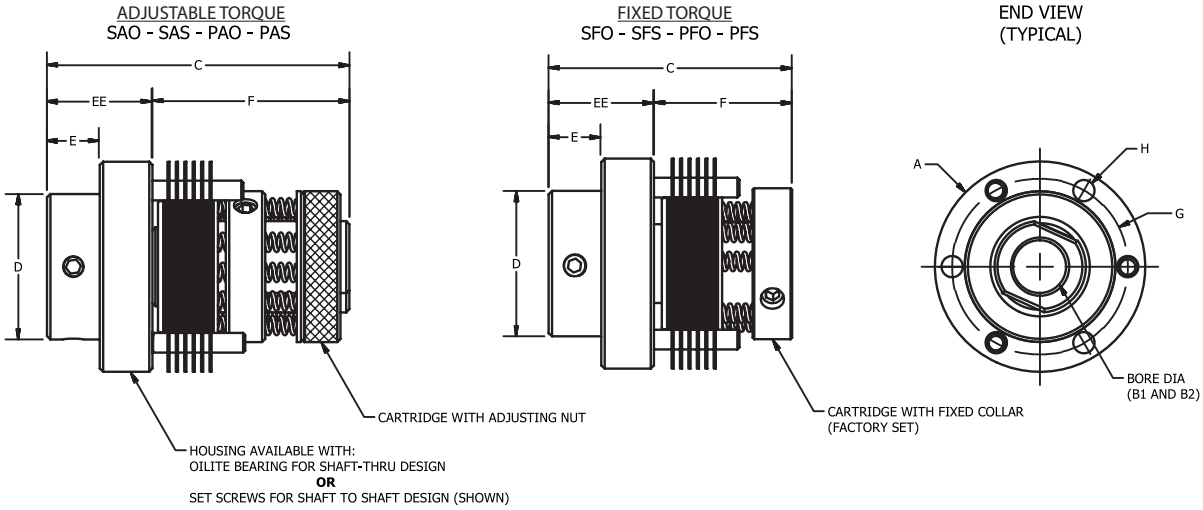

Single Plate														
Part Number		Type	Torque* (in-lb)	Watts	A (in)	B1 & B2 Min Bore	B1 & B2 Max Bore	C (in)	D (in)	E (in)	EE (in)	F (in)	G (in)	H (in)
Shaft-Shaft	Pulley Style													
PAS 20	**PAO 20**	Adjustable	2.5	1	1.25	0.250"	10mm	1.06	0.76	0.19	0.31	0.75	1.062	0.09
PFS 20	**PFO 20**	Fixed	2.5	1	1.25	0.250"	10mm	0.78	0.76	0.19	0.31	0.47	1.062	0.09
PAS 24	**PAO 24**	Adjustable	4	2	1.50	0.375"	13mm	1.32	1.01	0.19	0.38	0.94	1.312	0.13
PFS 24	**PFO 24**	Fixed	4	2	1.50	0.375"	13mm	1.07	1.01	0.19	0.38	0.69	1.312	0.13
PAS 32	**PAO 32**	Adjustable	8	5	2.00	12mm	16mm	1.72	1.38	0.25	0.50	1.22	1.672	0.19
PFS 32	**PFO 32**	Fixed	8	5	2.00	12mm	16mm	1.22	1.38	0.25	0.50	0.72	1.672	0.19
PAS 44	**PAO 44**	Adjustable	12	7	2.75	12mm	16mm	1.72	1.63	0.25	0.50	1.22	2.375	0.19
PFS 44	**PFO 44**	Fixed	12	7	2.75	12mm	16mm	1.22	1.63	0.25	0.50	0.72	2.375	0.19
PAS 48	**PAO 48**	Adjustable	25	9	3.00	0.625"	1.000"	2.75	1.76	0.50	1.00	1.75	2.625	0.25
PFS 48	**PFO 48**	Fixed	25	9	3.00	0.625"	1.000"	2.25	1.76	0.50	1.00	1.25	2.625	0.25

*Torque Capacity @ 50 RPM (50% higher torque possible for lower duty cycles. Call for assistance.)

Size	AVAILABLE BORES B1 & B2																				
	INCH +.002/-.000									METRIC +.05/-.0											
	1/4	5/16	3/8	1/2	5/8	3/4	7/8	1	1 1/4	8	9	10	12	13	14	15	16	20	24	25	30	32
20	•	•	•							•	•	•										
24			•	•								•	•	•								
32				•	•								•	•	•	•	•					
44				•	•								•	•	•	•	•					
48					•	•	•	•								•	•	•	•	•		
CODE	24	27	31	36	41	47	50	53	55	28	30	32	35	37	38	40	42	48	51	52	56	58

PAO
SFS

CLUTCHES

Slip Clutches

Standard: Adjustable & Fixed

PAO
SFS

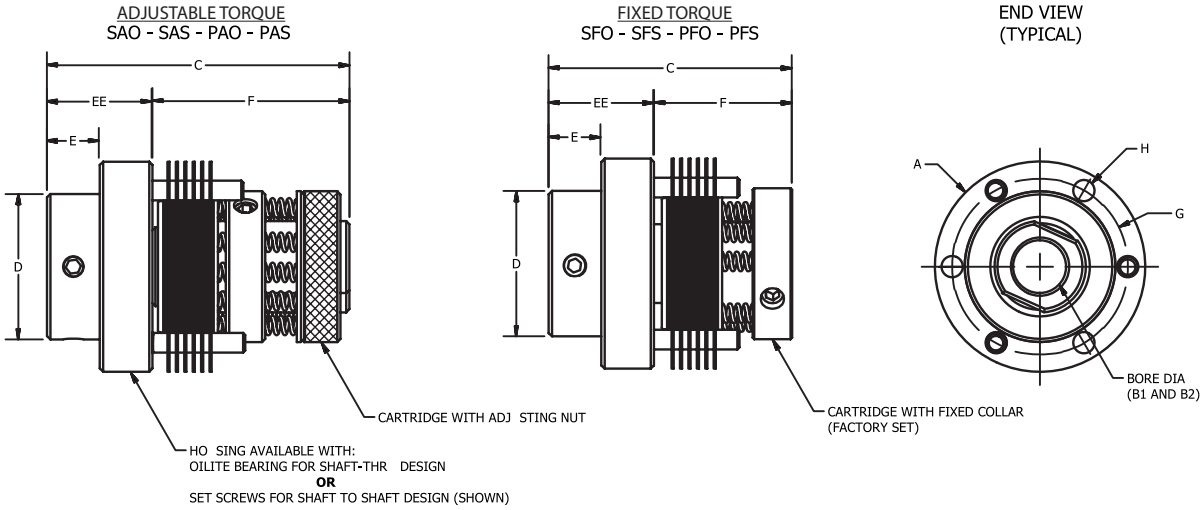

Multiplate															
Part Number		Type	Torque* (in-lb)	Watts	A (in)	B1 & B2 Min Bore	B1 & B2 Max Bore	C (in)	D (in)	E (in)	EE (in)	F (in)	G (in)	H (in)
Shaft-Shaft	Pulley Style													
SAS 20	**SAO 20**	Adjustable	12	6	1.25	0.250"	10mm	1.50	0.76	0.25	0.50	1.00	1.062	0.09
SFS 20	**SFO 20**	Fixed	12	6	1.25	0.250"	10mm	1.19	0.76	0.25	0.50	0.69	1.062	0.09
SAS 24	**SAO 24**	Adjustable	25	15	1.50	0.375"	13mm	2.50	1.01	0.37	0.75	1.75	1.312	0.13
SFS 24	**SFO 24**	Fixed	25	15	1.50	0.375"	13mm	2.00	1.01	0.37	0.75	1.21	1.312	0.13
SAS 32	**SAO32**	Adjustable	50	30	2.00	12mm	16mm	2.87	1.38	0.50	1.00	1.88	1.672	0.19
SFS 32	**SFO 32**	Fixed	50	30	2.00	12mm	16mm	2.38	1.38	0.50	1.00	1.31	1.672	0.19
SAS 44	**SAO 44**	Adjustable	75	43	2.75	12mm	16mm	2.87	1.63	0.50	1.00	1.88	2.375	0.19
SFS 44	**SFO 44**	Fixed	75	43	2.75	12mm	16mm	2.38	1.63	0.50	1.00	1.31	2.375	0.19
SAS 48	**SAO 48**	Adjustable	100	55	3.00	0.625"	1.000"	3.50	1.76	0.50	1.00	2.50	2.625	0.25
SFS 48	**SFO 48**	Fixed	100	55	3.00	0.625"	1.000"	3.00	1.76	0.50	1.00	2.00	2.625	0.25

*Torque Capacity @ 50 RPM (50% higher torque possible for lower duty cycles. Call for assistance.)

Size	AVAILABLE BORES B1 & B2																				
	INCH +.002/-.000									METRIC +.05/-.0											
	1/4	5/16	3/8	1/2	5/8	3/4	7/8	1	1 1/4	8	9	10	12	13	14	15	16	20	24	25	30	32
20	•	•	•							•	•	•										
24			•	•								•	•	•								
32				•	•								•	•	•	•	•					
44				•	•								•	•	•	•	•					
48					•	•	•	•								•	•	•	•	•		
CODE	24	27	31	36	41	47	50	53	55	28	30	32	35	37	38	40	42	48	51	52	56	58

CLUTCHES

Slip Clutches

Part Number System, Shaft Penetration, Bore Codes

P, S, E, A, V
Series

	Shaft Penetration Specifications			
	Minimum		Maximum	
Type	Cartridge	Housing	Cartridge	Housing
PAS16	0.50	0.22	0.75	0.31
PFS16	.175-250	0.22	0.47	0.31
PAS20	0.50	0.22	0.75	0.31
PFS20	.175-250	0.22	0.47	0.31
PAS24	0.60	0.22	0.94	0.38
PFS24	.300-.400	0.22	0.69	0.38
PAS32	0.86	0.22	1.22	0.50
PFS32	.350-450	0.22	0.72	0.50
PAS44	0.86	0.22	1.22	0.50
PFS44	.350-450	0.22	0.72	0.50
PAS48	1.13	0.38	1.75	1.00
PFS48	.350-.700	0.38	1.25	1.00
SAS16	0.56	0.22	1.00	0.31
SFS16	.175-.250	0.22	0.69	0.31
SAS20	0.56	0.22	1.00	0.31
SFS20	.175-.250	0.22	0.69	0.31
SFS24	0.86	0.32	1.75	0.75
SFS24	.300-.400	0.32	1.21	0.75
SAS32	1.06	0.38	1.88	1.00
SFS32	.350-.450	0.38	1.31	1.00
SAS44	1.06	0.38	1.88	1.00
SFS44	.350-.450	0.38	1.31	1.00
SAS48	1.15	0.38	2.50	1.00
SFS48	.350-.700	0.38	1.25	1.00

	Shaft Penetration Specifications			
	Minimum		Maximum	
Type	Cartridge	Housing	Cartridge	Housing
EAS16	0.55	0.22	1.18	0.31
EFS16	.175-250	0.22	0.88	0.31
EAS24	0.97	0.32	1.75	0.75
EFS24	.300-.400	0.32	1.25	0.75
EAS32	1.07	0.38	1.88	0.57
EFS32	.350-.450	0.38	1.30	0.57
EAS44	1.07	0.38	1.88	0.57
EFS44	.350-.450	0.38	1.30	0.57
EAS52	1.85	0.44	3.25	0.75
AAS20	0.32	0.22	2.00	0.50
AAS24	0.32	0.32	2.63	0.75
AAS32	0.32	0.38	2.63	1.00
AAS44	0.45	0.38	2.63	1.00
VAS20	0.55	0.27	0.75	0.50
VAS24	0.88	0.32	1.25	0.50
VAS32	1.08	0.32	1.25	0.50
VAS44	1.08	0.40	1.25	0.70

*Cartridge minimum penetration for fixed torque clutches depend on the torque setting.

Example of gear mounted on slip clutch
(We can supply gears + pulleys)

IDENTIFICATION

S A S 24 31 36

- 36 is the bore code (1/2") for the housing. See chart below for bore codes.
- 31 is the bore code (3/8") for the cartridge. See chart below for bore codes
- 24 is the outside diameter in sixteenths of an inch. Standard sizes are 16, 20, 24, 32, 44, 48, and 52.
- "S" is shaft to shaft. "O" is shaft to pulley or gear. "Y" is cartridge alone.
- "A" is adjustable torque. "F" is factory preset torque.
- Type of Slip Clutch
  S = Multi-Plate P = Single-Plate
  E = Low Backlash A = Pneumatic
  V = Vertical, Thrust Capable

Size	AVAILABLE BORES B1 & B2																					
	INCH +.002/-.000									METRIC +.05/-.0												
	1/4	5/16	3/8	1/2	5/8	3/4	7/8	1	1 1/4	8	9	10	12	13	14	15	16	20	24	25	30	32
16	•	•	•							•	•	•										
20	•	•	•							•	•	•										
24			•	•								•	•	•								
32				•	•								•	•	•	•	•					
44				•	•								•	•	•	•	•					
48					•	•	•	•								•	•	•	•	•		
CODE	24	27	31	36	41	47	50	53	55	28	30	32	35	37	38	40	42	48	51	52	56	58

CLUTCHES

Slip Clutches

Technical Notes

P, S, E, A, V
Series

General

Ondrives.US Slip Clutches control torque for intermittent, continuous or overload slip. The clutches will drive in both directions, slip when the torque setting is reached, and resume driving as the load is reduced. They are excellent as continuous drag brakes, protection against accidental or intentional overloads, for "soft starts", slip at the end of a stroke, etc.

Ondrives.US Slip Clutches are precision devices containing 2 to 12 brass plates interfaced with a long life friction material. Soft springs maintain pressure on the friction plates, assuring constant torque. An adjacent part of your mechanism can often be used as the Slip Clutch housing.

Fixed torque clutches are available preset at the factory.

Capacity

The clutch capacity is based on continuous operation at 50 RPM for over 30 million cycles. Torque, RPM, duty cycle and life are inter-dependent. A reduction of any of these will allow an increase in any other.

Running at 25 RPM will allow twice the torque, or running for only 10% of the cycle will allow higher RPM, etc. The limit is based on heat build up measured in watts per:

Watts = Torque (inch pounds) x RPM x 0.011 x Duty cycle %

(Duty cycle % = time in slip/total time)

Example: An SAS20.3131 can dissipate 6 watts continuously. This translates to:

Inch - lbs	x	RPM	x	% Slip	x	constant	=	Watts
10		50		100%		0.011		5.5
2		250		100%		0.011		5.5
2		500		50%		0.011		5.5
2		1000		25%		0.011		5.5

Call us with any questions about specifications and use

CLUTCHES

Slip Clutches

Clutch Mounting Options

P, S, E, A, V
Series

A

SHAFT TO SHAFT
SHAFTS MUST BE SUPPORTED
AND ALIGNED WITHIN .010-.015

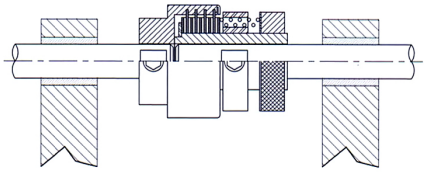

B

GEAR/PULLEY/SPROCKET
ADAPTED TO HOUSING WITH
KNURL, ROLL PIN, CAP SCREWS, ETC.

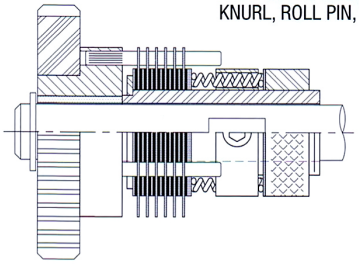

C

SUPPLY or REWIND SPOOL
ADAPTED TO HOUSING
WITH KNURL, PIN, CAP
SCREWS, SET SCREW, KEY, ETC.

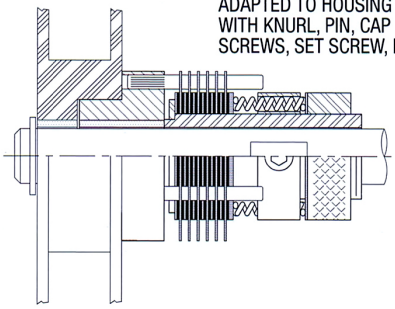

D

GEAR/PULLEY/SPROCKET
MODIFIED WITH PINS FOR ENGAGEMENT
HOUSING IS ELIMINATED

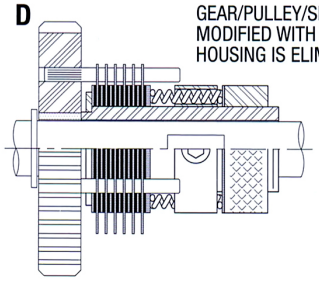

E

GEAR/PULLEY/SPROCKET
INTEGRATED AS
PART OF CARTRIDGE

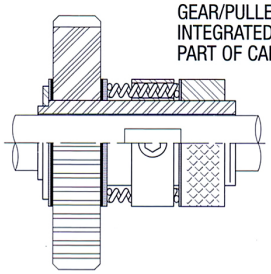

F

KNOB ADAPTED TO HOUSING
KNURL, SET SCREW, PIN, ETC.

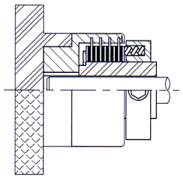

G

MACHINE FRAME
ADAPTED WITH CAP SCREWS
TO HOUSING

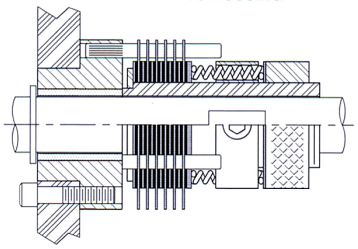

H
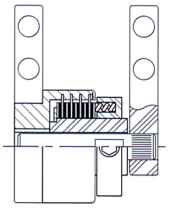
ROTARY POSITION HOLDER
(HINGE)