LPBS

COMPONENTS

Easy-Access™ 304 Stainless Steel Shaft Supports

Low Profile, Top Loading

LPBS



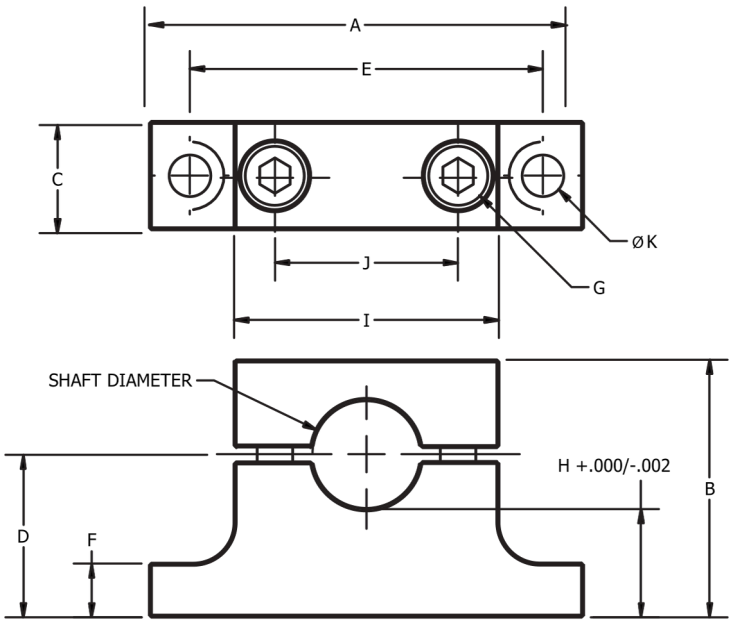

All dimensions are in inches.

Part Number	Shaft Dia.	A	B	C	D	E	F	G	H	I	J	K	Weight (lb)
LPBS-04	0.250	1.63	0.87	0.38	0.562	1.25	0.19	#6	0.437	0.91	0.56	0.16	0.10
LPBS-06	0.375	1.75	1.00	0.38	0.625	1.38	0.19	#6	0.437	1.03	0.69	0.16	0.12
LPBS-08	0.500	2.00	1.19	0.50	0.750	1.63	0.25	#8	0.500	1.22	0.84	0.19	0.20
LPBS-10	0.625	2.63	1.44	0.50	0.938	2.12	0.28	#10	0.625	1.53	1.03	0.22	0.30
LPBS-12	0.750	2.75	1.56	0.50	1.000	2.25	0.31	#10	0.625	1.66	1.16	0.22	0.35
LPBS-16	1.000	3.19	1.94	0.75	1.250	2.62	0.38	1/4	0.750	2.03	1.47	0.28	0.72
LPBS-20	1.250	3.75	2.31	0.75	1.500	3.12	0.44	5/16	0.875	2.47	1.81	0.34	0.98
LPBS-24	1.500	4.00	2.69	0.75	1.750	3.37	0.50	5/16	1.000	2.72	2.06	0.34	1.20
LPBS-32	2.000	5.00	3.31	1.25	2.125	4.25	0.63	3/8	1.125	3.41	2.66	0.41	3.00

Materials: 304 Stainless Steel
Fasteners: 18-8 Stainless Steel

Lowest profile available
Easily customizable

ROHS compliant

The unique removable top design of this shaft support allows the user to easily remove the shafts, linear bearings and carriage without upsetting the position of the shaft support. This eliminates the need to reset the critical parallel alignment required in many linear shaft systems.

	Easy-Access™ Shaft Supports	Common Shaft Supports
Available shaft diameters from 1/4" to 2"	√	√
Maintains alignment while servicing shafts and bearings	√	X
Customs available (bore size, bore shape, material)	√	X
Parallel and perpendicular surfaces for easy alignment	√	X
Superior shaft holding strength	√	X
Lowest base to shaft height available	√	X

ondrives.us
1-888-260-7466
516-771-6444
sales@ondrivesus.com
www.ondrivesus.com