COMPONENTS

LPBS-M

Easy-Access ™ 304 Stainless Steel Shaft Supports

Low Profile, Top Loading

LPBS-M



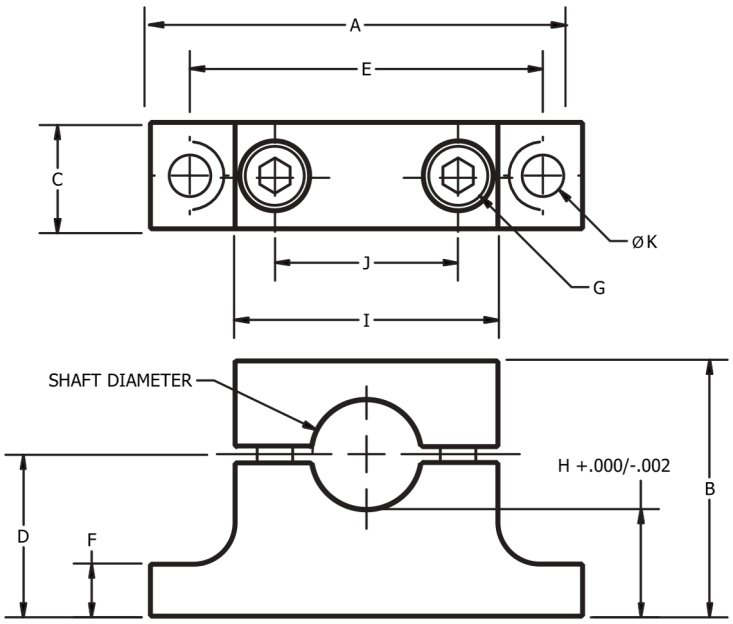

All dimensions are in millimeters

Part Number	Shaft Dia.	A	B	C	D	E	F	G	H	I	J	K	Weight (lb)
LPBS-08M	8	44	21	10	12	35	5	M4	8.0	26	16	4.5	0.10
LPBS-10M	10	46	25	12	14	38	5	M4	9.0	28	18	4.5	0.14
LPBS-12M	12	48	25	12	14	40	5	M4	8.0	30	20	4.5	0.16
LPBS-16M	16	62	31	13	18	50	6	M5	10.0	38	26	5.5	0.24
LPBS-20M	20	65	36	13	22	54	8	M5	12.0	42	30	5.5	0.30
LPBS-25M	25	80	44	19	27	66	8	M6	14.5	52	38	6.6	0.60
LPBS-30M	30	96	52	19	32	78	10	M8	17.0	62	44	9	0.84
LPBS-40M	40	108	66	19	40	90	12	M8	20.0	72	55	9	0.16

Materials: 304 Stainless Steel
Fasteners: 18-8 Stainless Steel

Lowest profile available **ROHS compliant**
Easily customizable

The unique removable top design of this shaft support allows the user to easily remove the shafts, linear bearings and carriage without upsetting the position of the shaft support. This eliminates the need to reset the critical parallel alignment required in many linear shaft systems.

	Easy-Access™ Shaft Suppor ts	Common Shaft Suppor ts
Available shaft diameters from 8mm to 40mm	√	√
Maintains alignment while servicing shafts and bearings	√	X
Customs available (bore size, bore shape, material)	√	X
Parallel and perpendicular surfaces for easy alignment	√	X
Superior shaft holding strength	√	X
Lowest base to shaft height available	√	X

ondrives.us
1-888-260-7466
516-771-6444
sales@ondrivesus.com
www.ondrivesus.com