COMPONENTS

LPF

Easy-Access™ Aluminum Shaft Supports

Base Mount, Top Loading

LPF



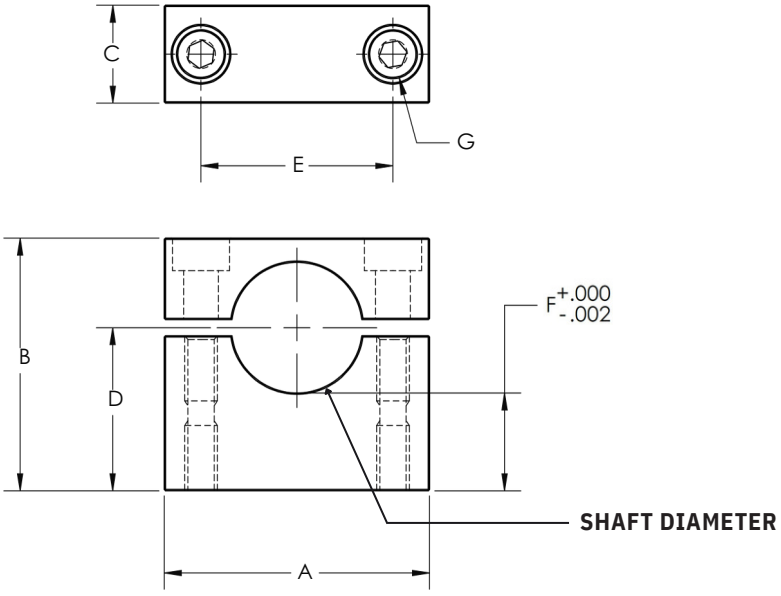

Alldimensionsarein inches.

Part Number	Shaft Dia.	A	B	C	D	E	F	G	Weight (lb)
LPF-06	0.375	1.03	1.00	.38	.625	.69	.437	#6-32	0.04
LPF-08	0.500	1.22	1.19	.50	.750	.84	.500	#8-32	0.08
LPF-12	0.750	1.66	1.56	.50	1.00	1.16	.625	#10-32	0.12
LPF-16	1.000	2.03	1.94	.75	1.25	1.47	.750	#1/4-20	0.24

Materials: Aluminum, Clear Anodize
Fasteners: Alloy Steel

Lowest profile available **Significant weight saving**
Easily customizable **ROHS compliant**

The unique removable top design of this shaft support allows the user to easily remove the shafts, linear bearings and carriage without upsetting the position of the shaft support. This eliminates the need to reset the critical parallel alignment required in many linear shaft systems.

	Easy-Access™ Shaft Suppor ts	Common Shaft Suppor ts
Available shaft diameters from 3/8” to 1”	√	√
Maintains alignment while servicing shafts and bearings	√	X
Customs available (bore size, bore shape, material)	√	X
Light Weight	√	X
Parallel and perpendicular surfaces for easy alignment	√	X
Superior shaft holding strength	√	X
Available in Low Profile and Standard footprint sizes	√	X
Lowest base to shaft height available	√	X

ondrives.us
1-888-260-7466
516-771-6444
sales@ondrivesus.com
www.ondrivesus.com