LPG

COMPONENTS

Easy-Access™ Aluminum Shaft Supports

Narrow Mount, Top Loading

LPG



Made in USA

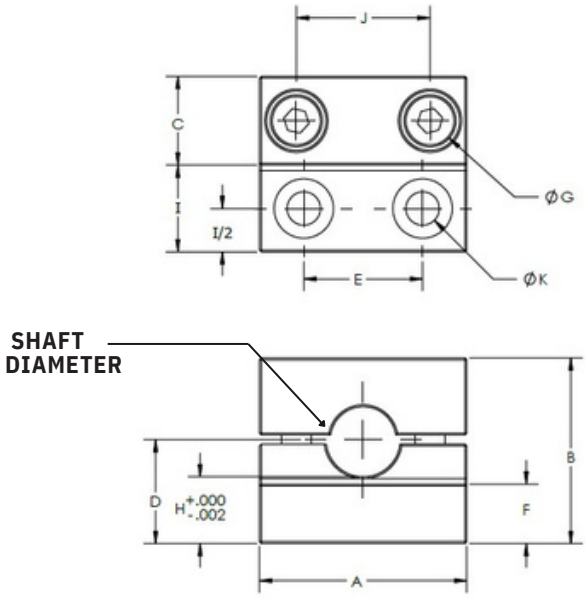

All dimensions are in inches

Part Number	Shaft Dia.	A	B	C	D	E	F	G	H	I	J	K	Weight (lb)
LPG-06	0.375	1.03	1.00	0.38	0.625	0.50	0.38	#6-32	.437	0.55	0.69	0.18	0.06
LPG-08	0.500	1.22	1.19	0.50	0.750	0.75	0.44	#8-32	.500	0.68	0.84	0.20	0.10
LPG-12	0.750	1.66	1.56	0.50	1.000	1.00	0.56	#10-24	.625	0.68	1.16	0.27	0.16
LPG-16	1.000	2.03	1.96	0.75	1.250	1.50	0.69	#1/4-20	.750	0.68	1.47	0.27	0.32

Materials: Aluminum, Clear Anodized
Fasteners: Alloy Steel, Black Oxide
Lowest profile available
Easy to customize

Significant weight saving
ROHS compliant

The unique removable top design of this shaft support allows the user to easily remove the shafts, linear bearings and carriage without upsetting the position of the shaft support. This eliminates the need to reset the critical parallel alignment required in many linear shaft systems.

	Easy-Access™ Shaft Suppor ts	Common Shaft Suppor ts
Available shaft diameters from 3/8" to 1"	√	√
Maintains alignment while servicing shafts and bearings	√	X
Customs available (bore size, bore shape, material)	√	X
Light Weight	√	X
Parallel and perpendicular surfaces for easy alignment	√	X
Superior shaft holding strength	√	X
Lowest base to shaft height available	√	X

ondrives.us
1-888-260-7466
516-771-6444
sales@ondrivesus.com
www.ondrivesus.com