COMPONENTS

SBL-M | **SBL-M**

Easy-Access™ Linear Shaft Supports

Standard Height, Top Loading



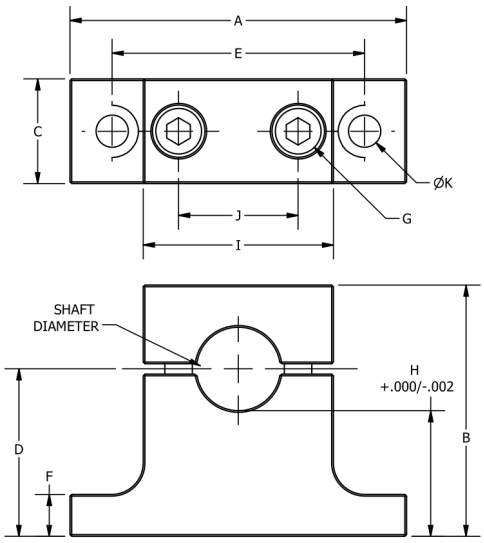

All dimensions are in millimeters

Part Number	Shaft Dia.	A	B	C	D	E	F	G	H	I	J	K	Weight (lb)
SBLM-08	8	32	23	10	15	25	5.2	M2.5	11.0	16	12	4.5	0.04
SBLM-12	12	40	30	12	20	32	5.5	M3	14.0	22	17	5.5	0.06
SBLM-16	16	50	38	16	25	40	6.5	M4	17.0	29	22	5.5	0.10
SBLM-20	20	60	45	20	30	45	8.0	M5	20.0	34	26	5.5	0.18
SBLM-25	25	74	55	25	35	60	9.0	M6	22.5	44	34	6.6	0.34
SBLM-30	30	84	63	28	40	68	10.0	M8	25.0	52	40	9	0.48
SBLM-40	40	108	80	32	50	86	12.0	M10	30.0	65	52	11	0.86
***SBLB-1.50CD**	BLANK	82.6	55.6	25.4	38.1	63.5	9.65	1/4-20	---	49.3	34.0	7.11	0.46

*Usermachinableforhexorsquare profiles or any diameter up to 25.4mm

Materials: Aluminum, Black Anodized
Fasteners: Alloy Steel, Black Oxide

Easy to customize
Significant weight saving
ROHS compliant

The unique removable top design of this shaft support allows the user to easily remove the shafts, linear bearings and carriage without upsetting the position of the shaft support. This eliminates the need to reset the critical parallel alignment required in many linear shaft systems.

	Easy-Access™ Shaft Suppor ts	Common Shaft Suppor ts
Available shaft diameters from 3mm to 50mm	√	√
Maintains alignment while servicing shafts and bearings	√	X
Customs available (bore size, bore shape, material)	√	X
Light Weight	√	X
Parallel and perpendicular surfaces for easy alignment	√	X
Superior shaft holding strength	√	X
Available in Low Profile and Standard footprint sizes	√	X
Lowest base to shaft height available	√	X

ondrives.us
1-888-260-7466
516-771-6444
sales@ondrivesus.com
www.ondrivesus.com