ATA

AIR-TORQUE

Piston Air Motors

Non-lubricated; Operates with either dry or lubricated air supply

ATA

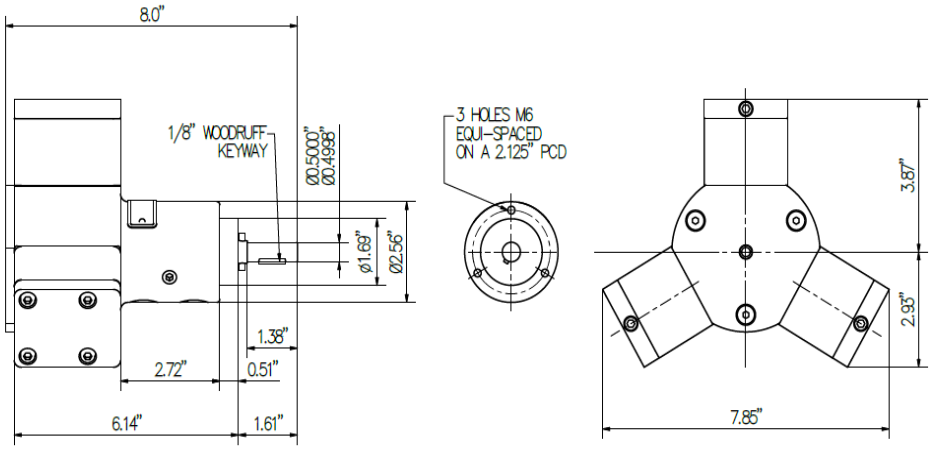

Part Number	Type	Housing	Ports	Speed Range	Weight
ATA-3A	Body Mount	Aluminum	1/4" BSP	150-700 Rpm	8.27 lbs

Torque at 200 rpm / 6.9 bar (100 psi)	87 in.lb
Torque at 700 rpm / 6.9 bar (100 psi)	41 in.lb
Max air consumption 700 rpm / 6.9 bar	12.7 ft3/min
Shaft Diameter	0.5"

Available on Request:
Air Motors with Gearboxes
Lubricated Air Motors

*Also available in Flange Mount, Base Mount, NEMA flanges, and Acetal Housing on REQUEST

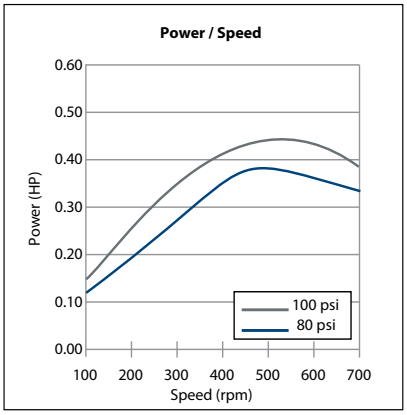

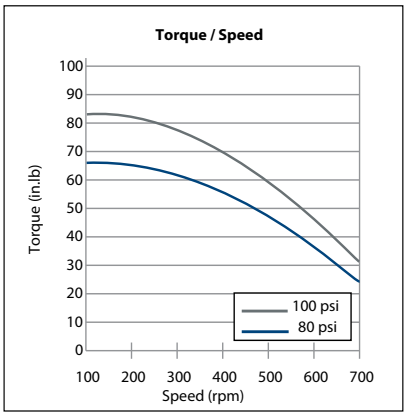

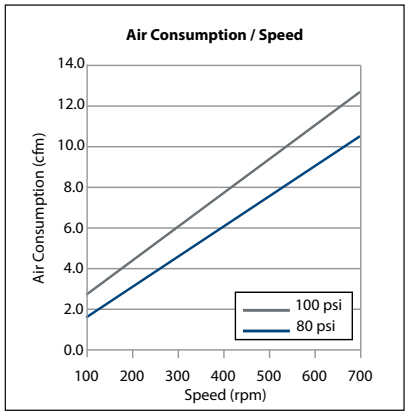

Testing in your application is necessary. All figures listed are to be used for guidance only.

ondrives.us
1-888-260-7466
516-771-6444
sales@ondrivesus.com
www.ondrives.us