BLN40

GEARBOXES

Heavy Duty Gear Reducers

13 – 43 Nm **6:1 - 24:1**

BLN40

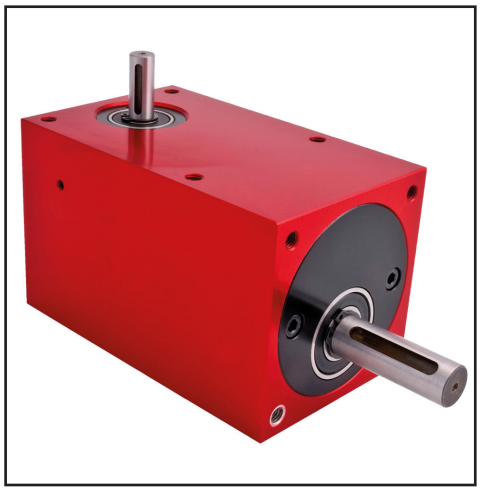

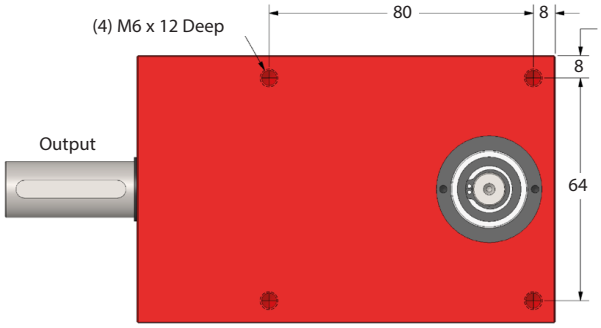

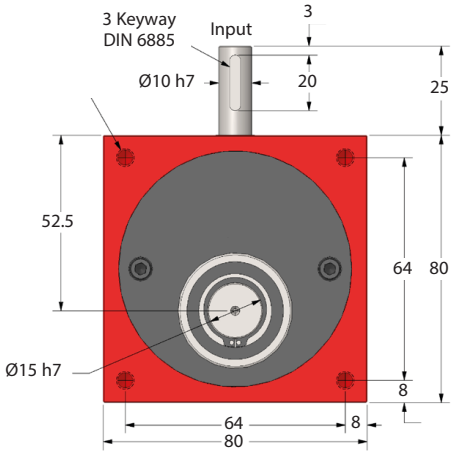

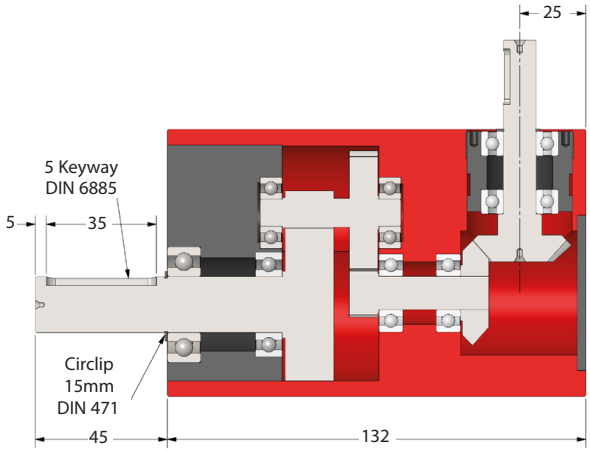

Part Number	Ratio	Efficiency at 1000 Rpm	Nm Output at 1000 Rpm
BLN40-6	6:1	88%	17.0
BLN40-12	12:1	88%	19.1
BLN40-18	18.1	88%	19.5
BLN40-24	24:1	88%	20.0

Backlash: Depends on ratio.
Max. Input Speed: 3,000 Rpm.
Greased for Life: Shell Gadus S2 V220AD 2.
Output Key: KK5-35.
Input Key: KK3-20.

Testing in your application is necessary.
You will need to assess duty cycles and confirm gearbox suitability with your own calculations.
All figures listed are to be used for guidance only.

Output Torque Nm

RPM Input	Reduction Ratio			
	6:1	**12:1**	**18:1**	**24:1**
3000	13.0	15.9	16.0	16.2
2000	14.4	17.0	17.3	17.8
1000	17.0	19.1	19.5	20.0
500	19.6	21.3	22.0	22.7
100	25.0	29.1	29.7	30.3
50	28.3	34.0	34.5	35.2
10	34.0	40.4	41.3	43.0

ondrives.us
1-888-260-7466
516-771-6444
sales@ondrivesus.com
www.ondrivesus.com