OFG40

e-cad Drawings Available

GEARBOXES

Precision Oil Filled Worm Gear Reducers

Shaft Input 5 – 18 Nm ***5:1 - 120:1***

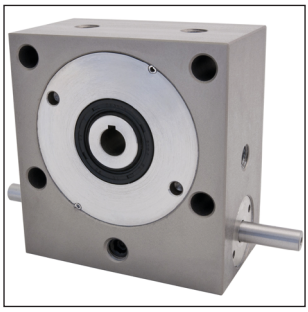

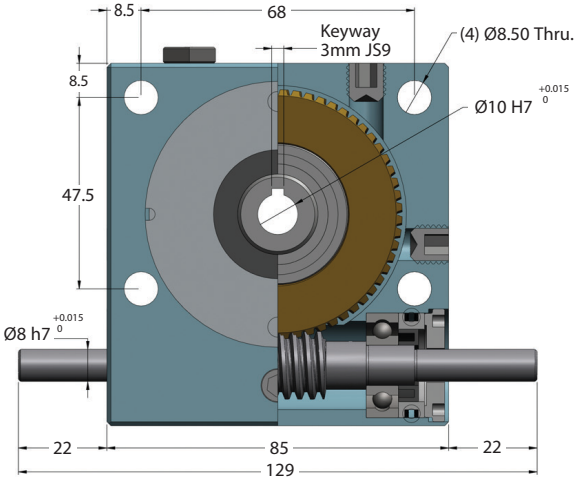

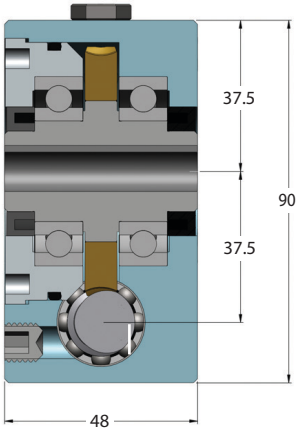

Part Number Standard ≤25'	Part Number Low Backlash ≤8'	Ratio	Efficiency at 1000 Rpm	Reflected Inertia at Input (kg.m²)	Self Locking Output
OFG40-10	**OFG40-10A**	10:1	89%	2.94×10^{-6}	✖
OFG40-12	**OFG40-12A**	12:1	87%	2.69×10^{-6}	✖
OFG40-15	**OFG40-15A**	15:1	85%	2.49×10^{-6}	✖
OFG40-20	**OFG40-20A**	20:1	83%	2.33×10^{-6}	✖
OFG40-30	**OFG40-30A**	30:1	76%	2.22×10^{-6}	✖
OFG40-60	**OFG40-60A**	60:1	65%	2.15×10^{-6}	✔
OFG40-120	**OFG40-120A**	120:1	41%	2.10×10^{-6}	✔
OFG40-SP	**OFG40-SPA**	5:1-120:1	Special Ratios : Replace **SP** with required ratio		

Case (3): Aluminum 6082-T6 natural hard anodised.
Worm (4): Alloy Case hard steel 805M20, DIN 21NiCrMo2 SAE 8620.
Wheel Teeth (11): Nickel Aluminum Bronze Ca104, ISO CuAl10Fe5Ni5, ASTM C63200.
Wheel Hub (11): Stainless Steel 303, W.-Nr 1.4305, DIN X8CrNiS18-9.

OFG40 Backlash: ≤25 arc min. **OFG40-A Backlash:** ≤8 arc min. ultra precision wormwheel set.
Lubrication: Synthetic oil ISO 150.
Self Locking Output: Subject to ratio and only applies in static condition.
Amount of locking effect may vary due to manufacturing processes.
Max. Overhung and Thrust Loads at 1000 Rpm: Input Overhung Load (F_{vb}) = 10 kg.
Output Overhung Load (F_{va}) = 30 kg. Output Thrust Load (F_a) = 20 kg.

Output Shafts: P40-X (single), P40-DX (double). **Output Key:** KK3-30.
Input Shaft Modifications: Smaller Dia., Mill Keyway/Flat, Shorten Shaft, Circlip Groove:, Pin Hole.

Testing in your application is necessary. You will need to assess duty cycles and confirm suitability with your own calculations. All figures listed are to be used for guidance only.

Output Torque Nm

Rpm Input	Reduction Ratio 10:1	12:1	15:1	20:1	30:1	60:1	120:1
3000	5.0	5.2	5.4	5.6	6.4	7.2	6.5
2000	5.5	5.8	6.2	6.6	7.3	8.0	7.2
1000	7.1	7.5	8.0	8.2	9.0	10.0	8.7
500	8.9	9.1	9.6	10.0	10.5	11.4	10.2
200	11.6	11.9	12.3	12.5	13.5	14.2	11.7
100	13.4	13.6	14.1	14.6	15.3	16.0	12.3
50	15.1	15.5	16.2	16.4	17.3	17.6	12.3
10	17.6	17.6	17.6	17.7	17.8	18.0	12.3

ondrives.US Corp.
516-771-6777
516-771-6444
sales@ondrives.us
www.ondrives.us